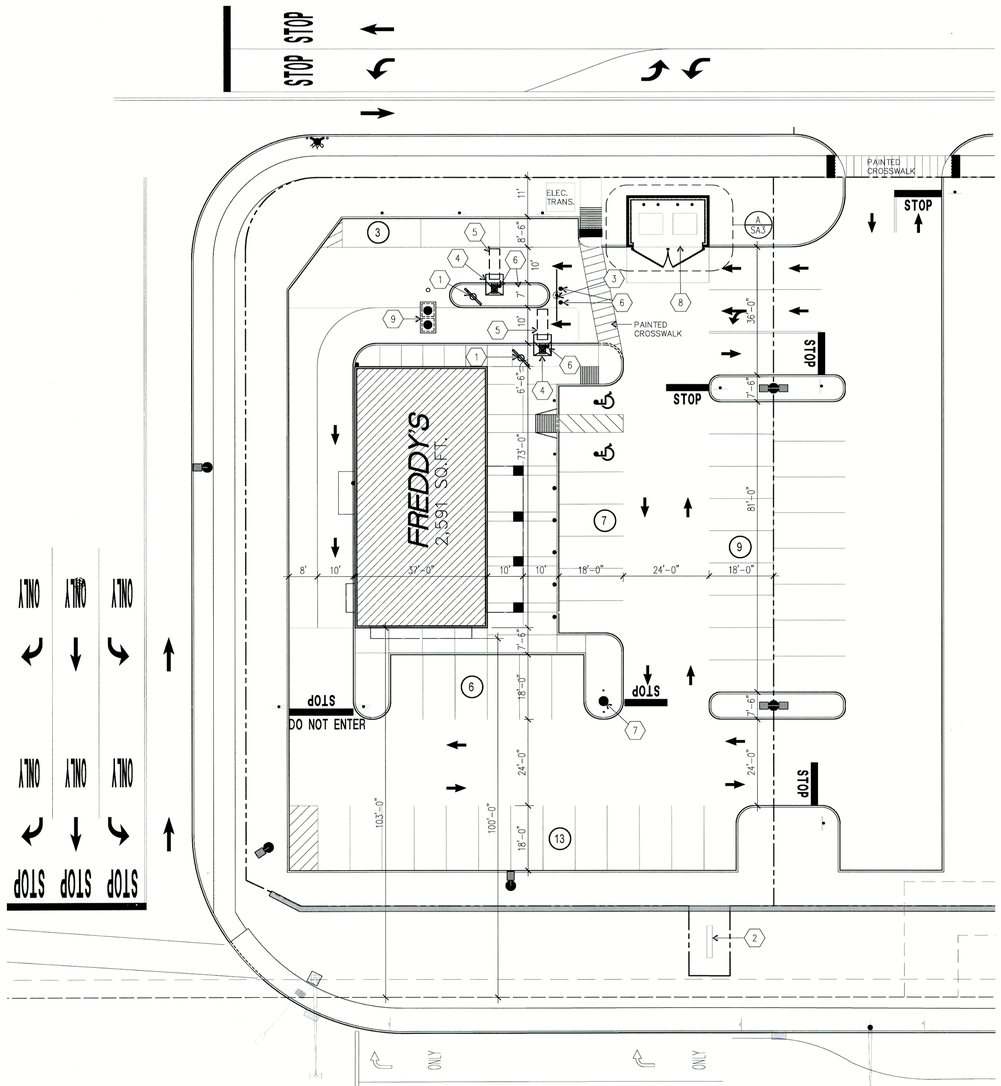

(A) ARCHITECTURAL SITE PLAN

1"=20'-0"

NORTH

SITE AREA: 29,569 SQ. FT. – .68 ACRES
BUILDING AREA: 2,591 SQ. FT.
38 PARKING SPACES

1. MENU BOARD – REF. FDN. DTL'S 2/SA2
2. MONUMENT SIGN WITH "FREDDY'S" SIGN PANEL
3. CLEARANCE BAR – REF. DTL. 5/SA2
4. ORDER CANOPY – REF. DTL. 4/SA2
5. DETECTOR LOOP
6. PIPE BOLLARD
7. FLAGPOLE – REF. DTL. 4/SA1
8. TRASH ENCLOSURE – REF. DTLS. SHT. SA3
9. GREASE INTERCEPTOR (BELOW GRADE)

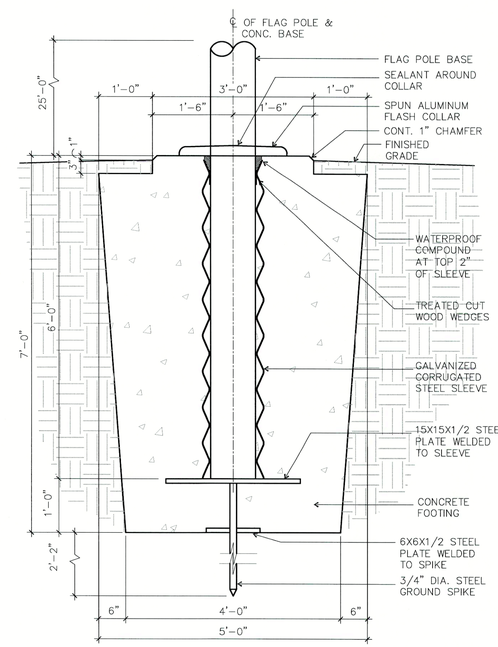

(4A) FLAG POLE BASE DETAIL

3/4" = 1'-0"

CONCORD INDUSTRIES FLAG POLE SPECIFICATIONS						
EXPOSED HEIGHT (feet)	SHAFT DIAMETER (inch)	MAXIMUM WALL THICKNESS (inch)	MAXIMUM UNFLAGGED WINDSPEED (mph)	RECOMMENDED FLAG SIZE (feet)	FLAGGED WINDSPEED (mph)	CONCORD CONTINENTAL CATALOG PART NUMBER
25'-0"	3	.156	178	5X8	111	ESR25C51-ACL

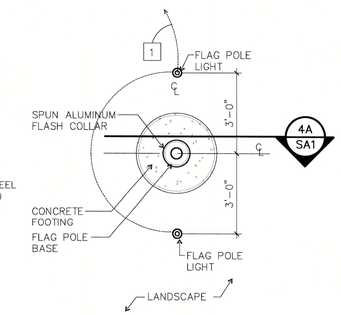

LIGHT FIXTURES:
KICHLER – 120V LED 29W 10 DEG. S 42K AZT MODEL NO. 16204AZT42 (TEXTURED ARCHITECTURAL BRONZE)

LIGHT FIXTURES STAKE:
KICHLER – ACCESSORY STAKE 120V – MODEL NO. 15276BK (BLACK (PAINTED)

(4) FLAG POLE PLAN VIEW

3/8" = 1'-0"

1 ROUTE CIRCUIT TO PANEL INDICATED VIA 120V PHOTCELL. LOCATE PHOTOCELL ON ROOF OF BUILDING FACING NORTH.

THE DESIGN AND DETAILS DISCLOSED HEREIN ARE THE EXCLUSIVE PROPERTY OF WINTER ARCHITECTS INC. AND SHALL NOT BE COPIED OR REPRODUCED IN WHOLE OR IN PART WITHOUT ITS PRIOR WRITTEN CONSENT.

DAN WINTER, ARCHITECT

FREDDY'S FROZEN CUSTARD

EDGAR ROAD
LINDEN, NEW JERSEY

STATE OF NEW JERSEY
DAN WINTER
14481
REGISTERED ARCHITECT
7-13-20

WINTER ARCHITECTS
1024 EAST FIRST STREET
WICHITA, KS. 67214
PH. 316-267-7142

ARCHITECTURAL SITE PLAN

DATE
7/13/2020

DRAWN BY: RC
CHECKED BY: DW

SHEET NO.
SA1

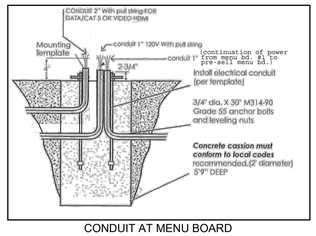

CONDUIT AT MENU BOARD

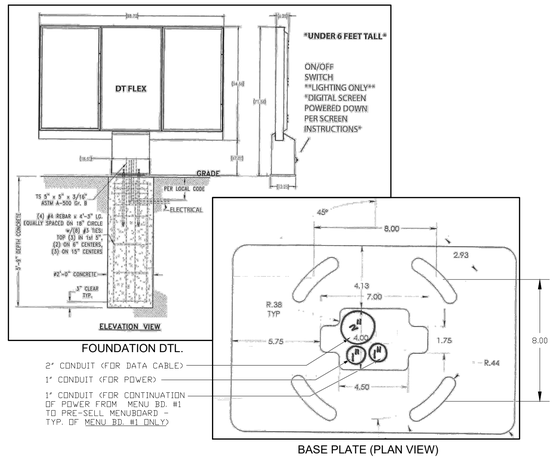

FOUNDATION DTL.

BASE PLATE (PLAN VIEW)

1 NOT USED

SCALE: NO SCALE

2 MENU BOARD DETAILS

SCALE: NO SCALE

3 NOT USED

SCALE: NO SCALE

6 NOT USED

3/4" = 1'-0"

7 NOT USED

3/4" = 1'-0"

8 NOT USED

3/4" = 1'-0"

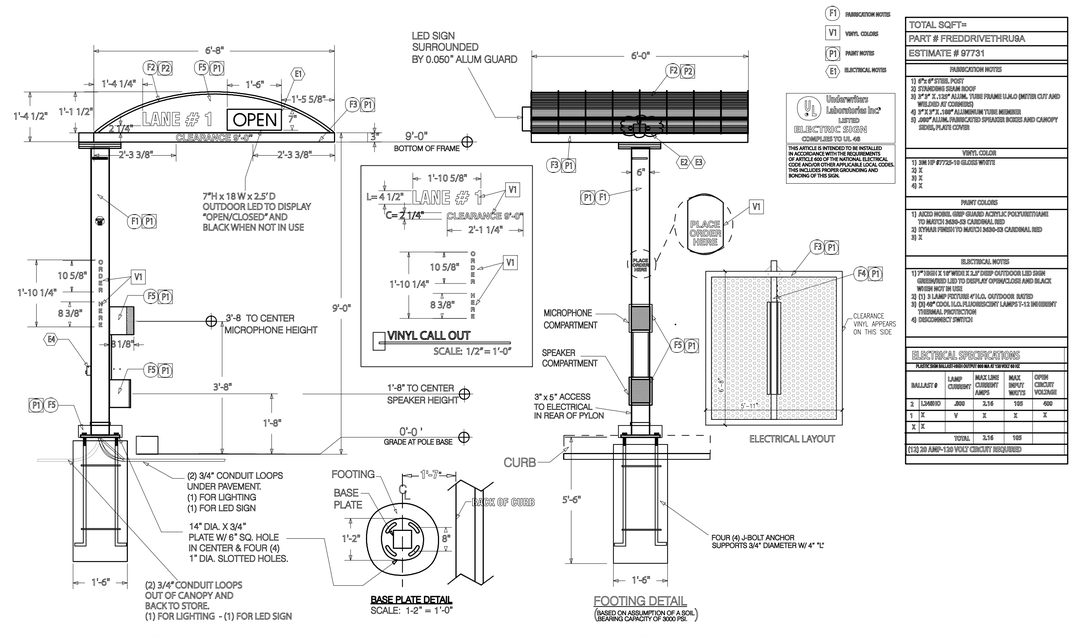

F1 FABRICATION NOTES
V1 VINYL COLORS
P1 PAINT NOTES
E1 ELECTRICAL NOTES

Underwriters Laboratories Inc® LISTED ELECTRIC SIGN COMPLIES TO UL 48

THIS ARTICLE IS INTENDED TO BE INSTALLED IN ACCORDANCE WITH THE REQUIREMENTS OF ARTICLE 600 OF THE NATIONAL ELECTRICAL CODE AND/OR OTHER APPLICABLE LOCAL CODES. THIS INCLUDES PROPER GROUNDING AND BONDING OF THIS SIGN.

TOTAL SQFT=

PART # FREDDRIVETHRUGA

ESTIMATE # 97731

FABRICATION NOTES

1) 6"x6" STEEL POST
2) STANDING SEAM ROOF
3) 3"x3" X .125" ALUM. TUBE FRAME U.N.O (MITER CUT AND WELDED AT CORNERS)
4) 3"X 3"X .188" ALUMINUM TUBE MEMBER
5) .080" ALUM. FABRICATED SPEAKER BOXES AND CANOPY SIDES, PLATE COVER

VINYL COLOR

1) 3M 180 #7725-10 GLOSS WHITE
2) X
3) X
4) X

PAINT COLORS

1) ACCO BONIS. GRIP GUARD ACRYLIC POLYURETHANE TO MATCH 3630-53 CARDINAL RED
2) SYWAX FINISH TO MATCH 3630-53 CARDINAL RED
3) X

ELECTRICAL NOTES

1) 7"HIGH X 18"WIDE X 2.5"DEEP OUTDOOR LED SIGN GREEN/RED LED TO DISPLAY OPEN/CLOSE AND BLACK WHEN NOT IN USE
2) (1) 8 LAMP FIXTURE 4'T.L.O. OUTDOOR RATED
3) (5) 48" COOL T.L.O. FLUORESCENT LAMPS T-12 (HIGH EFFICIENT THERMAL PROTECTION)
4) DISCONNECT SWITCH

ELECTRICAL SPECIFICATIONS

PLACE SIGN BALLAST HERE (NOTE: MAX 75' FROM WIRE

BALLAST #	LAMP CURRENT	MAX LINE CURRENT AMPS	MAX INPUT WATTS	OPTIM CIRCUIT VOLTAGE
3	1346610	.800	3.16	105	400
1	X	V	X	X	X
2	X				
		TOTAL	3.16	105	

(132) 20 AMP-120 VOLT CIRCUIT REQUIRED

4 DRIVE-UP CANOPY DRAWINGS

SCALE: 1/2"= 1'-0"

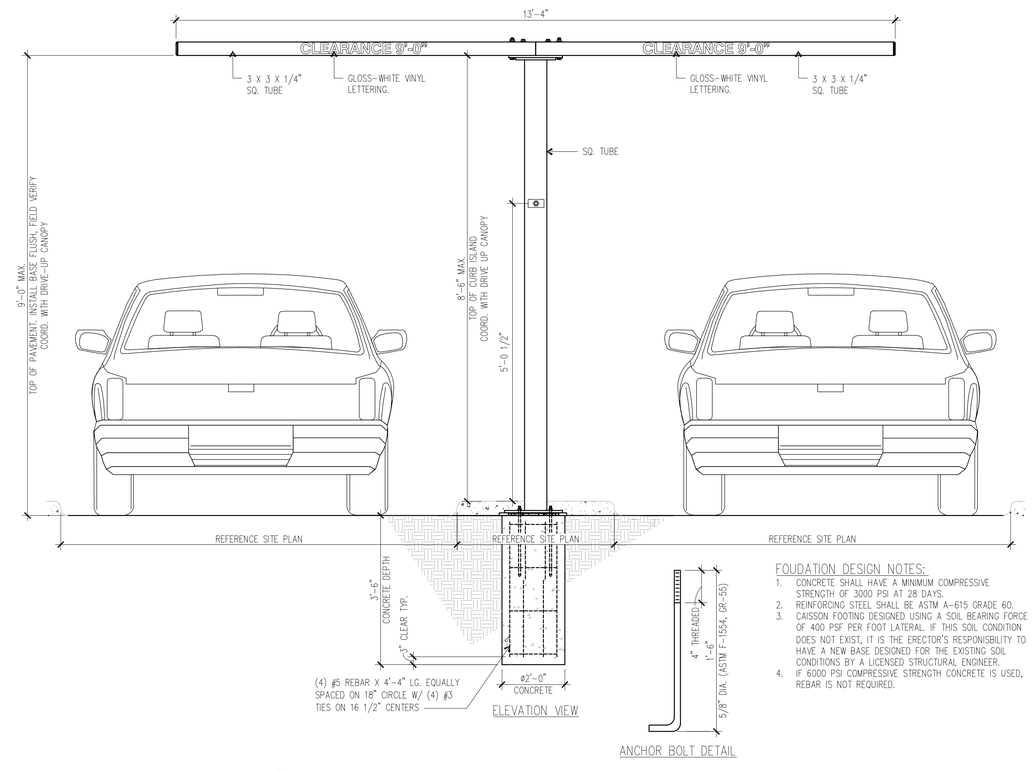

FOUDATION DESIGN NOTES:

1. CONCRETE SHALL HAVE A MINIMUM COMPRESSIVE STRENGTH OF 3000 PSI AT 28 DAYS.
2. REINFORCING STEEL SHALL BE ASTM A-615 GRADE 60.
3. CAISSON FOOTING DESIGNED USING A SOIL BEARING FORCE OF 400 PSF PER FOOT LATERAL. IF THIS SOIL CONDITION DOES NOT EXIST, IT IS THE ERECTOR'S RESPONISIBILITY TO HAVE A NEW BASE DESIGNED FOR THE EXISTING SOIL CONDITIONS BY A LICENSED STRUCTURAL ENGINEER.
4. IF 6000 PSI COMPRESSIVE STRENGTH CONCRETE IS USED, REBAR IS NOT REQUIRED.

5 DOUBLE ARM CLEARANCE BAR DETAILS

N.T.S.

THE DESIGN AND DETAILS DISCLOSED HEREIN ARE THE EXCLUSIVE PROPERTY OF WINTER ARCHITECTS INC. AND SHALL NOT BE COPIED OR REPRODUCED IN WHOLE OR IN PART WITHOUT ITS PRIOR WRITTEN CONSENT.

DAN WINTER, ARCHITECT

FREDDY'S FROZEN CUSTARD

EDGAR ROAD
LINDEN, NEW JERSEY

STATE OF NEW JERSEY
DAN WINTER
14261
REGISTERED ARCHITECT
7-13-20

WINTER ARCHITECTS
1024 EAST FIRST STREET
WICHITA, KS. 67214
PH. 316-267-7142

SITE PLAN DETAILS

DATE
7/13/2020

DRAWN BY: RC
CHECKED BY: DW

SHEET NO.
SA2

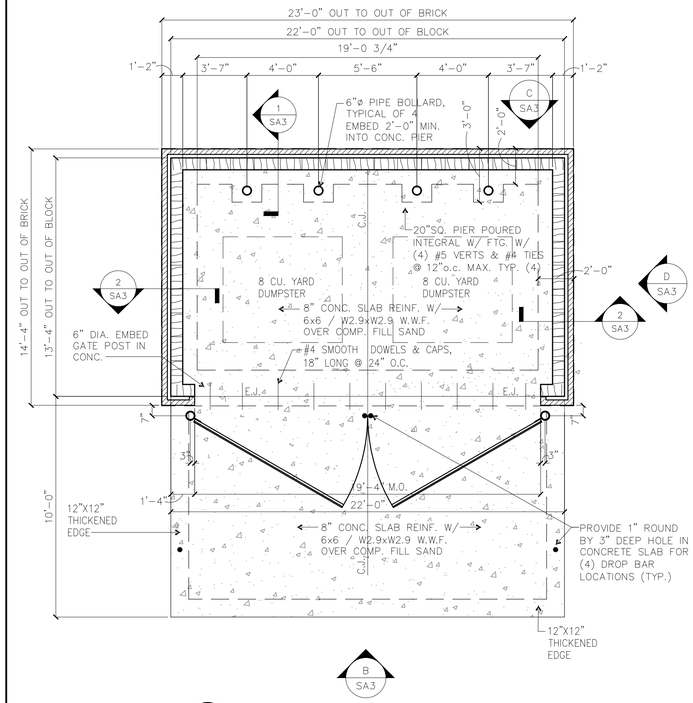

A TRASH ENCLOSURE PLAN
1/4" = 1'-0"

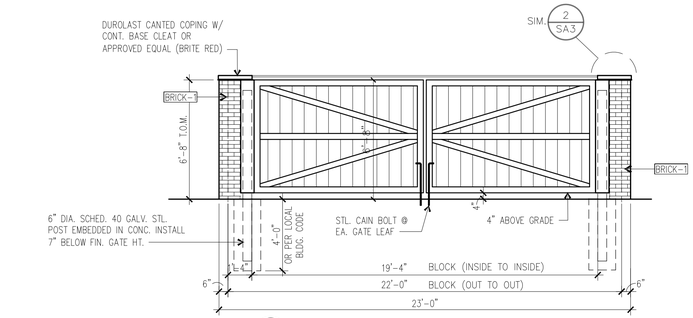

B TRASH ENCLOSURE
1/4" = 1'-0"

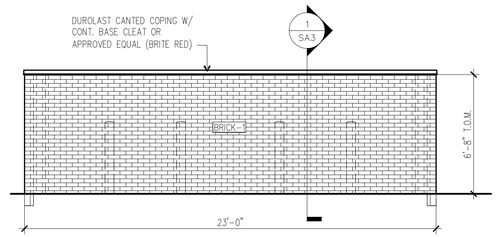

C TRASH ENCLOSURE
1/4" = 1'-0"
REAR ELEVATION

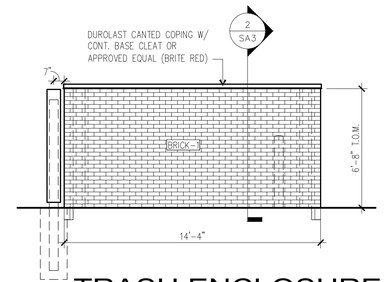

D TRASH ENCLOSURE
1/4" = 1'-0"
RIGHT SIDE ELEVATION
LEFT SIDE ELEVATION
MIRRORED

TRASH ENCLOSURE POST POSITION DETAIL & INSTALLATION

6" SCHEDULE 40 GALVANIZED STEEL POST

HEIGHT OF POST NEEDS TO BE SET AT 7" BELOW DESIRED FINISHED HEIGHT OF GATE. IE: 72" FINISHED HEIGHT OF GATE, POST SHOULD BE SET AT 65". FILL WITH CONCRETE AND STRIKE OFF FLAT AT TOP OF POST. MINIMUM 3" CLEARANCE AROUND 6" GALV POST TO ALLOW 9" GATE POST TO TURN. PLUMB STEEL POST.

AFTER STEEL POST HAS BEEN SET IN CURED CONCRETE - SECURE GATE & LIFT OVER STEEL POST - SLOWLY LOWER GATE TUBE OVER 6" POST - GATE IS SET WHEN DISTANCE BETWEEN GRADE AND GATE BOTTOM IS 4".

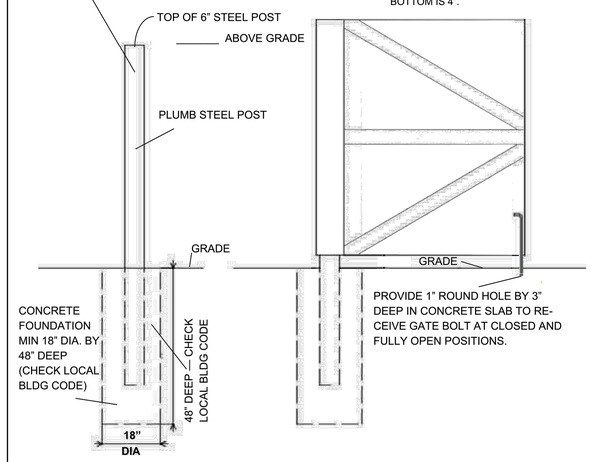

MUELLER DOOR CO., INC. , 27750 W CONCRETE DR., INGLESIDE, IL 60041
TELEPHONE: 815-385-8550 FAX: 815-385-8653
WEBSITE: WWW.MUELLERDOOR.COM

3 TRASH ENCLOSURE POST POSITION DETAIL AND INSTALLATION

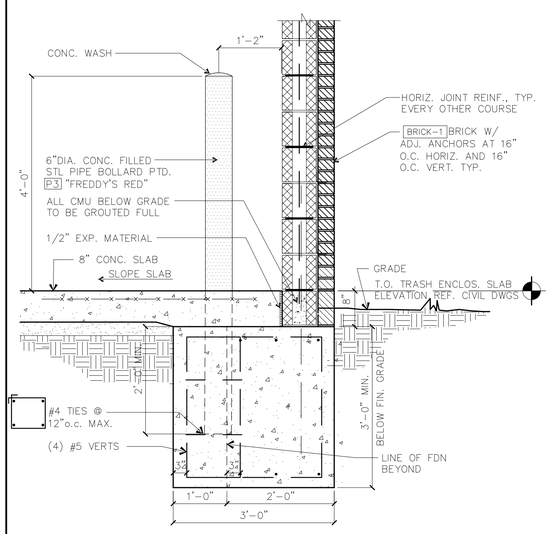

1 TRASH ENCLOSURE WALL
3/4"=1'-0"

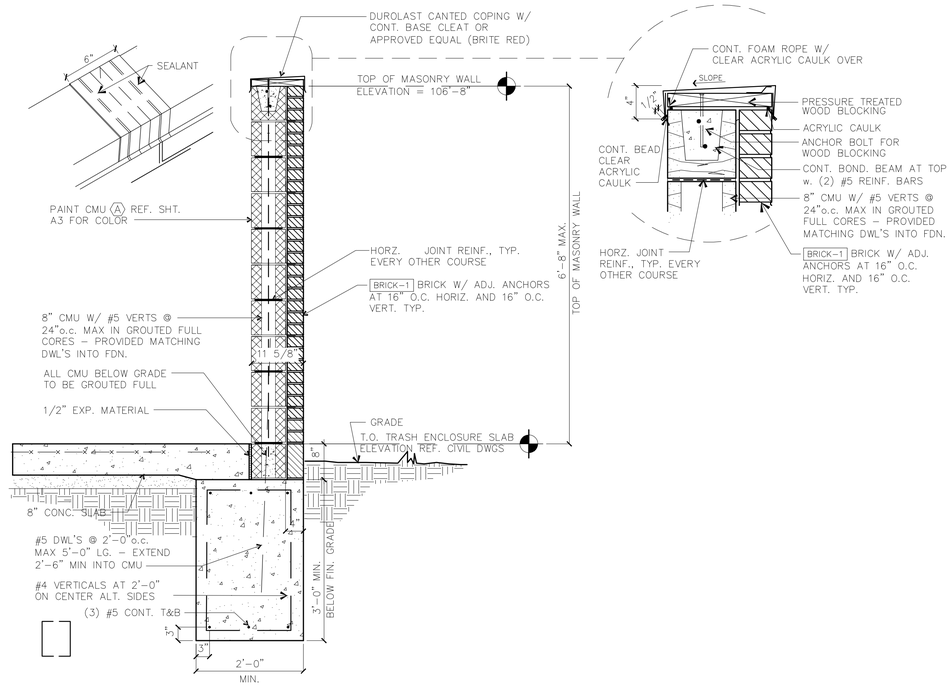

2 TRASH ENCLOSURE WALL
3/4"=1'-0"

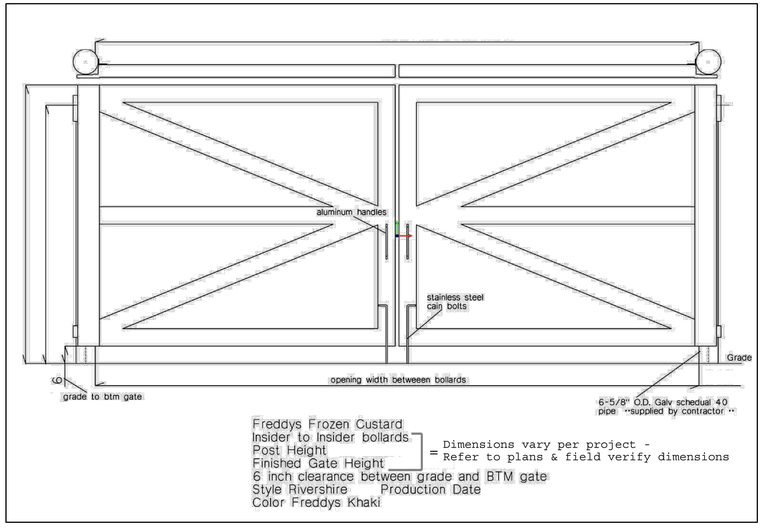

4 TRASH ENCLOSURE SWING GATE SPECIFICATIONS

THE DESIGN AND DETAILS DISCLOSED HEREIN ARE THE EXCLUSIVE PROPERTY OF WINTER ARCHITECTS INC. AND SHALL NOT BE COPIED OR REPRODUCED IN WHOLE OR IN PART WITHOUT ITS PRIOR WRITTEN CONSENT.

DAN WINTER, ARCHITECT

FREDDY'S FROZEN CUSTARD
EDGAR ROAD
LINDEN, NEW JERSEY

STATE OF NEW JERSEY
DAN WINTER
NO. 14461
REGISTERED ARCHITECT
7.13.20

WINTER ARCHITECTS
1024 EAST FIRST STREET
WICHITA, KS. 67214
PH. 316-267-7142

TRASH ENCLOSURE PLAN AND DETAILS

DATE	7/13/2020
DRAWN BY:	RC
CHECKED BY:	DW
SHEET NO.	SA3

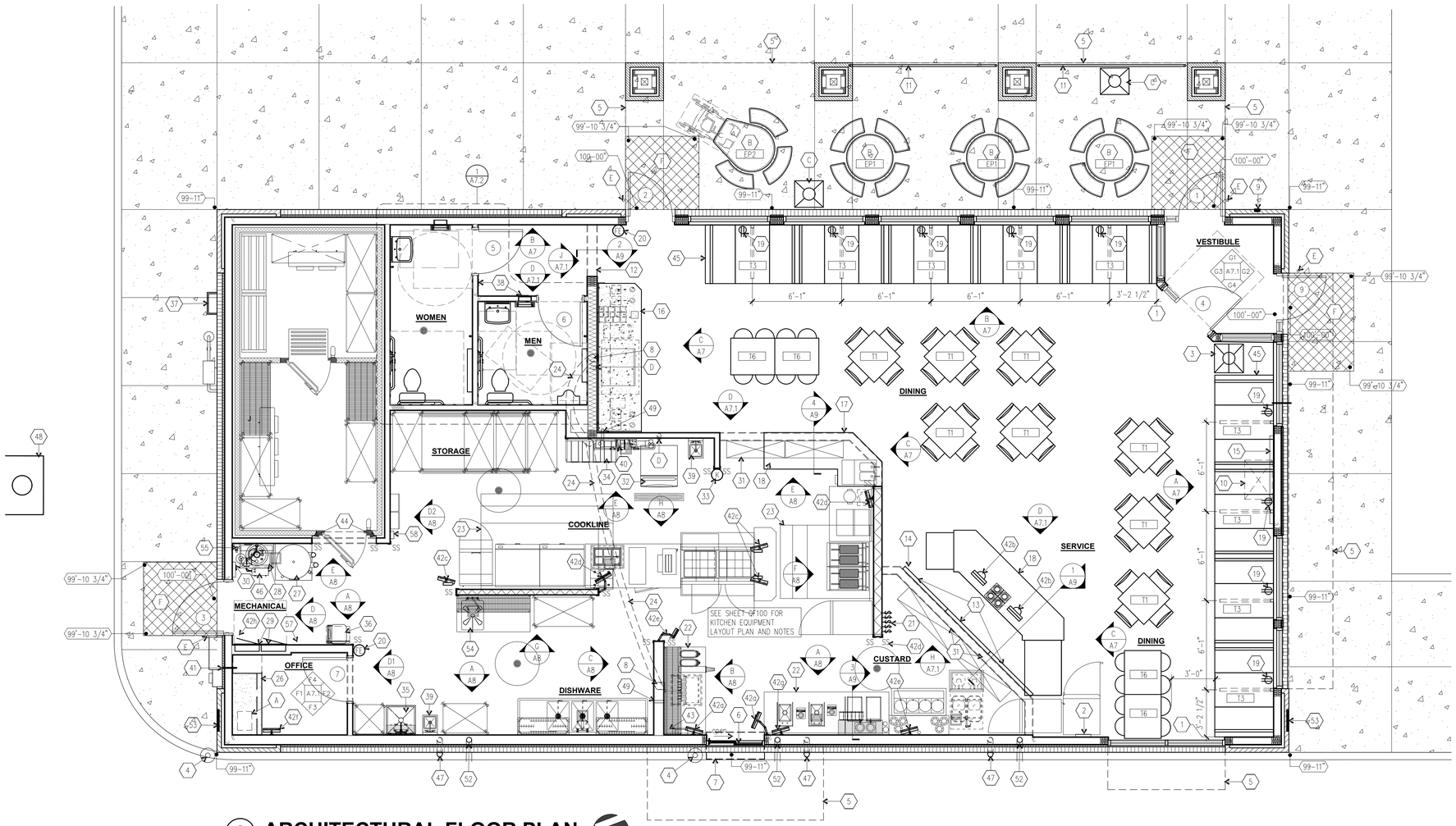

(A) ARCHITECTURAL FLOOR PLAN

1/4" = 1'-0"

REFER TO SHEET A1 FOR ALL STUD WALL, COLUMN AND WINDOW ROUGH OPENING LOCATIONS AND WALL PARTITION CALLOUTS.

NORTH

AREA CALCULATIONS	(NET)
VESTIBULE	50 SQ. FT.
DINING	966 SQ. FT.
CUSTARD	208 SQ. FT.
COOKLINE	331 SQ. FT.
DISHWARE	175 SQ. FT.
STORAGE	89 SQ. FT.
MECHANICAL	68 SQ. FT.
OFFICE	43 SQ. FT.
RESTROOMS	120 SQ. FT.
HALL	38 SQ. FT.
COOLER/FREEZER.	220 SQ. FT.
FREDDY'S AREA (NET)	2,308 SQ. FT.
FREDDY'S AREA (GROSS)	2,591 SQ. FT.

SEATING CALCULATIONS		
IN STORE		
0	6 SEAT BOOTHS	0
9	4 SEAT BOOTHS	36
8	4 SEAT TABLES	32
4	4 SEAT HIGH TOP TABLES	16
TOTAL IN STORE DINING		84
PATIO		
4	4 SEAT TABLES	16
TOTAL SEATING (DINING & PATIO)		100

FRAMING LEGEND:

- = 2x WOOD STUDS @ 16"o.c. SEE STUD LAYOUT PLAN A1.0 & WALL PARTITIONS A11 FOR WALL WIDTHS AND NOTES
- = NEW METAL STUDS SEE WALL PARTITIONS SHT. A11 FOR WALL WIDTHS AND NOTES
- = NEW COOLER WALLS
- = BRICK – SEE EXTERIOR FINISH SCHEDULE SHEET A3.0
- = EIFS – SEE EXTERIOR FINISH SCHEDULE SHEET A3.0

GENERAL PLAN NOTES:

- (A) SAFE BY BY OWNER INSTALLED TO FLOOR BY G.C. (VERIFY)
- (B) WAUSAU TILE CEMENT TABLE (BY OWNER)
- (C) WAUSAU TILE CEMENT RECEPTACLE (BY OWNER)
- (D) 3" PVC ELBOW WHERE LIQUID REFRIG. LINES COME THRU WALL – REFER TO DETAIL BY KITCHEN EQUIP SUPPLIER SHEET QF200
- (E) HEAVY DUTY FLOOR DOOR STOP
- (F) PROVIDE 5' X 5' SMOOTH LEVEL CONCRETE LANDING AT REQUIRED EXITS TO MEET ADA REQUIREMENTS
- (FE) NEW MIN. TYPE 2A 10BC WALL MOUNT FIRE EXTINGUISHER PROVIDED BY VENDOR AND INSTALLED BY GC. T.O. 60"A.F.F. MAX. PROTRUSION INTO PATH OF CIRCULATION 4"MAX. G.C. TO PROVIDE MIN. OF (2) FIRE EXTINGUISHERS. G.C. TO VERIFY & COORDINATE LOCATIONS AND QUANTITIES WITH LOCAL FIRE MARSHAL..
- (K) NEW TYPE K WALL MOUNT FIRE EXTINGUISHER PROVIDED BY VENDOR AND INSTALLED BY GC. T.O. 60"A.F.F. MAX. PROTRUSION INTO PATH OF CIRCULATION 4"MAX
- SS STAINLESS STEEL CORNER GUARDS REFER TO SHEET A7.0 FOR CORNER EDGE DETAILS.

PLAN KEYNOTES:

1. DIMENSIONS ARE FROM OUTSIDE FACE OF GYPSUM BOARD UNLESS OTHERWISE NOTED
2. CLOCK MTD. AT 8'-6" A.F.F.
3. TRASH RECEPTACLE
4. 4" CONC. FILLED PIPE BOLLARD,
5. BACKLIT AWNING ABOVE
6. READY ACCESS MODEL 275/ SINGLE PANEL SLIDER, 48"W x 60" H R.O. (INCL. AIR CURTAIN ABOVE). MANUAL OPEN/ ELECTRONIC RELEASE, MOD. 275-R/L, OPENS ON SIDE THE CAR APPROACHES
7. READY ACCESS MODEL AA300 – 275 PASS-THRU AIR CURTAIN SYSTEM
8. 6" PVC SYRUP LINE CHASE TO 6" ABOVE CLG.
9. RECESSED KNOX BOX OR @ LOC. DESIGNATED BY FIRE MARSHAL
10. ACCESS HATCH (ABOVE)
11. REF. TO DETAILS 5/A3 FOR GUARD RAIL DTLS.
12. SOFFIT ABOVE SEE 2/A2.1
13. DIGITAL MENU BOARD ABOVE
14. MENU BD. SOFFIT ABOVE SEE BULKHEAD FRAMING A1.0 FOR DIMENSIONS; REF. 1/A2.1 FOR DETAILS
15. FREDDY'S SIGN (ABOVE) BY OWNER INSTALLED BY SIGN MANUFACTURER
16. SS DRINK COUNTER PROVIDED BY EQUIP SUPPLIER REF. QF SHEETS
17. PICKUP COUNTER SOFFIT ABOVE SEE BULKHEAD FRAMING A1.0 FOR DIM'S; REF. 4/A2.1 FOR DTLS.
18. SEE SHT. A10 FOR COUNTER DETAILS AND DIMENSIONS
19. OUTLET/USB ABOVE BOOTH AT 36" A.F.F. REF. A7.0
20. 2A10BC FIRE EXTINGUISHER/ CAB
21. SWITCH BANK
22. CUSTARD AND DRIVE THRU COUNTERS BY EQUIPMENT SUPPLIER REF. QF SHEETS
23. EXHAUST HOOD ABOVE
24. SYRUP LINES ABOVE CLG.
25. NOT USED
26. PLASTIC LAMINATE COUNTERTOP
27. HOT WATER HEATER
28. CO2 TANK & RESERVE BACK UP TANK
29. 20" WIDE ELECTRICAL PANEL BOXES
30. IRRIGATION CONTROL BOX
31. UPPER SHELVES BEHIND MENU BOARD AND ABOVE PICKUP COUNTER
32. ICE MACHINE
33. TYPE "K" FIRE EXTINGUISHER
34. BAG N BOX
35. MOP SINK
36. FREDUCATION STATION & CHAIR
37. ROOF LADDER
38. ADA TACTILE RR SIGN
39. HAND SINK
40. WATER FILTER
41. 3/4" PVC FOR VIDEO CAMERA. VERIFY EXACT LOC.
42a. WALL MOUNTED POS SCREEN
42b. DESK MOUNTED POS SCREEN
42c. POLE MOUNTED MENU SCREEN
42d. WALL MOUNTED MENU SCREEN
42e. WALL MOUNTED DRINK SCREEN
42f. WALL MOUNTED OFFICE SCREEN
42g. WALL MOUNTED DRIVE THRU CAMERA SCREEN
42h. WALL MOUNTED SECURITY SCREEN
43. WALL MOUNTED HEADSET STATION ℄ @ 96"
44. SS FILLER PANEL BY G.C. REF. DETAIL 5/A7
45. FINISH PL-A BACK OF BOOTH. REF. FINISH SCHEDULE SHEET A1.2
46. EASI-WASH SYSTEM WALL MOUNTED
47. ROOF DRAIN OVERFLOW W/LAMBS TONGUE
48. GREASE INTERCEPTOR – F.VERIFY LOCATION
49. 3" PVC THRU-WALL FOR SODA DRAIN LINE
50. CHILD HIGH CHAIRS. PROVIDE BY OWNER
51. BOOSTER SEATS WITH SHELF PROVIDED BY OWNER
52. ROOF DRAIN LEADER
53. RECESSED S.S. EASI-WASH CABINET
54. PREP. SINK
55. 1 1/2" WATER SUPPLY
56. NOT USED
57. LIGHTING CONTROLS
58. DOOR CHIME

THE DESIGN AND DETAILS DISCLOSED HEREIN ARE THE EXCLUSIVE PROPERTY OF WINTER ARCHITECTS INC. AND SHALL NOT BE COPIED OR REPRODUCED IN WHOLE OR IN PART WITHOUT ITS PRIOR WRITTEN CONSENT.

DAN WINTER, ARCHITECT

FREDDY'S FROZEN CUSTARD

EDGAR ROAD
LINDEN, NEW JERSEY

STATE OF NEW JERSEY
DAN WINTER
14461
REGISTERED ARCHITECT
7.13.20

WINTER ARCHITECTS
1024 EAST FIRST STREET
WICHITA, KS. 67214
PH. 316-267-7142

FLOOR PLAN

DATE
7/13/2020

DRAWN BY: RC
CHECKED BY: DW

SHEET NO.
A1.1

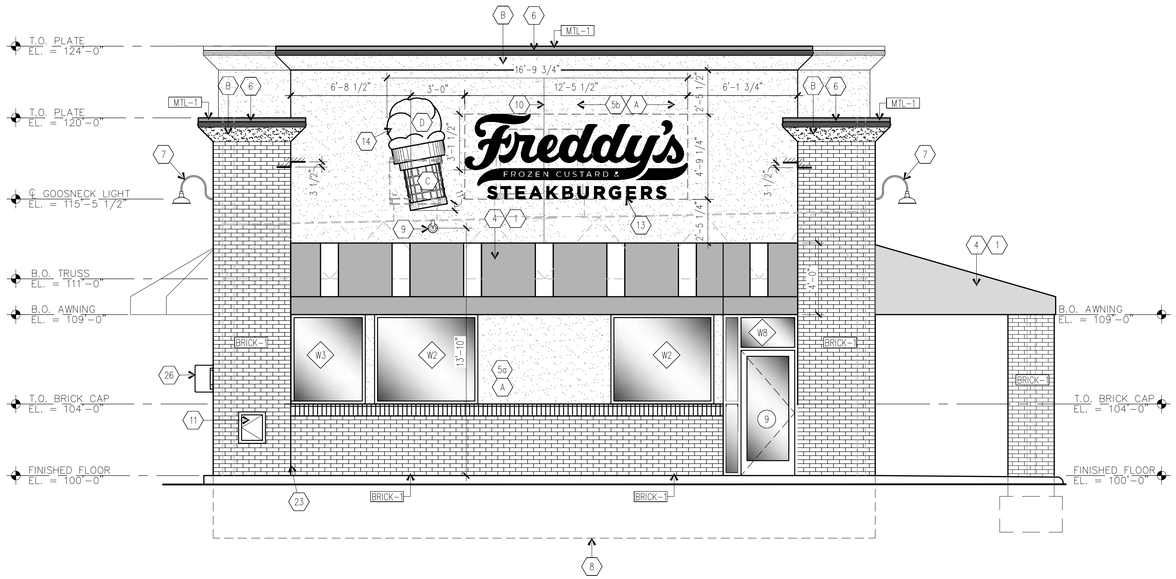

(A) SOUTH ELEVATION

1/4"= 1'-0"

SIGNAGE AREA: SOUTH ELEVATION

FREDDY'S = 59.4 SQ.FT.
CONE = 15 SQ.FT.(ARCHITECTURAL FEATURE)

TOTAL = 74.4 SQ.FT.

TOTAL SIGNAGE ALLOWED IS **74.0** SQ.FT. MAX
(2 SQ. FT. OF SIGN AREA FOR EACH LINEAL FOOT OF WALL ON WHICH THE SIGN IS TO BE MOUNTED)

AWNING COLOR KEY

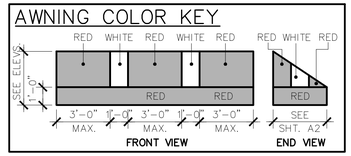

NOTE TO AWNING MANUFACTURER AND AWNING INSTALLER: AWNING FRAME TO BE ENGINEERED FOR APPROVAL BY LOCAL CODE AND DESIGNED TO MISS ALL BUILDING PROTRUSIONS NOT SHOWN ON PLANS.

CAULKING COLOR NOTE:
-AT EIFS / BRICK - MATCH EIFS
-AT BRICK / BRICK - MATCH BRICK
-AT EIFS / EIFS - MATCH EIFS
-AT EIFS / STOREFRONT - MATCH DARK BRONZE FRAME

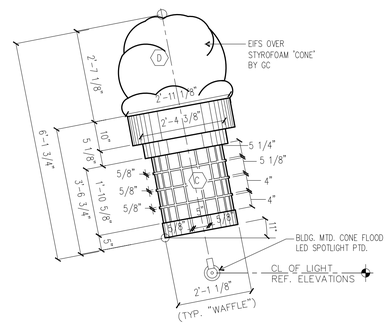

(1) "CUSTARD" ELEV.

1/2"= 1'-0"

EXTERIOR FINISH SCHEDULE						
SHERWIN WILLIAMS – PARENT NUMBER: BE37 FREDDY'S FROZEN CUSTARD						
EXTERIOR PAINT	DESCRIPTION	FINISH NO.	MFGR.	MFGR. NO.	COLOR	REMARKS
BUILDING WALLS	PAINT *	A	SHERWIN WILLIAMS	#7533	KHAKI SHADE	PAINT WITH TWO COATS ACRYLIC LATEX (SATIN)
BUILDING TRIM	PAINT *	B	SHERWIN WILLIAMS	#6126	FREDDY'S PEARL	PAINT WITH TWO COATS ACRYLIC LATEX (SATIN)
CONE	PAINT *	C	SHERWIN WILLIAMS	#17-143	BISCUIT FREDDY'S CONE	PAINT WITH TWO COATS ACRYLIC LATEX (SATIN)
CUSTARD	PAINT *	D	SHERWIN WILLIAMS	#17-313	FREDDY'S ICE WHITE	PAINT WITH TWO COATS ACRYLIC LATEX (SATIN)
BOLLARD	PAINT	P3	SHERWIN WILLIAMS	#17-572	FREDDY'S RED	PAINT WITH TWO COATS HIGH PERFORMANCE ACRYLIC (GLOSS)
GUARD RAIL	PAINT	P4	SHERWIN WILLIAMS	#B66B300	FREDDY'S JET BLACK	PAINT WITH TWO COATS HIGH PERFORMANCE ACRYLIC (GLOSS)
* NOTE: ALL EXTERIOR INSULATED FINISH SYSTEM (E.I.F.S.) IS PRE-MIXED WITH SHERWIN-WILLIAMS COLORS AS SPEC'D. ABOVE, NO PAINTING OF BUILDING E.I.F.S. (INCL. CONE) IS REQUIRED.						
EXTERIOR BRICK	DESCRIPTION	FINISH NO.	MFGR.		COLOR & TEXTURE	REMARKS
BUILDING BRICK (OPT. #1)	BRICK MODULAR (OPT. #1)	BRICK-1	THE LAKEWOOD BRICK COMPANY	ACME BRICK CO. P:316-941-3594	WELLSHIRE	GROUT COLOR – GRAY MODULAR & TIN – MADE RUMBLED
BUILDING BRICK (OPT. #2)	BRICK MODULAR (OPT. #2)	BRICK-1	INTERSTATE BRICK-UTAH		MOUNTAIN RED	GROUT COLOR – GRAY MODULAR & TIN – RUMBLED EXTRA CHARGE
METAL COPING	DESCRIPTION	FINISH NO.			COLOR	REMARKS
BUILDING COPING	COPING	MTL-1	DUROLAST		BRITE RED	2 PC COMPRESSION COPING CAP. SLOPE TOWARDS ROOF.

GENERAL NOTES:

SIGNS SHOWN ON THESE ELEVATIONS ARE FOR CODE REVIEW PURPOSES ONLY. THESE SIGN ELEVATIONS ARE NOT TO BE USED AS OR CONSTRUED AS SHOP DRAWINGS FOR SIGN CONSTRUCTION. SIGN SHOP DRAWINGS ARE PRODUCED BY THE SIGN MANUFACTURER FOR REVIEW AND APPROVAL BY THE OWNER.

NOTE TO AWNING MANUFACTURER AND AWNING INSTALLER. AWNING FRAME TO BE ENGINEERED FOR APPROVAL BY LOCAL CODE AND DESIGNED TO MISS ALL BUILDING PROTRUSIONS NOT SHOWN ON PLANS.

ELEVATION KEY NOTES:

1. (2)-TUBE, STRIP LED FIXTURES WITH CLEAR LENS COVERS TO BACK LIGHT AWNINGS, TYP. SUPPLIED BY OWNER. WIRED & INSTALLED BY ELEC. CONTR.
2. OVERFLOW DRAIN WITH LAMBS TONGUE
3. HOLLOW METAL EXIT DR. REF. DOOR SCHED.
4. EXTERIOR VINYL AWNING & ALUM FRAME BY OWNER AND AWNING MANUF, TYP REF. AWNING COLOR KEY SHT'S A3 & A4
5a. STO 1 1/2" DRAINABLE EXTERIOR INSULATED FINISH SYSTEM (E.I.F.S.) ADHESIVELY ADHERED "SAND PEBBLE FIN."
5b. STO 2 1/2" DRAINABLE EXTERIOR INSULATED FINISH SYSTEM (E.I.F.S.) ADHESIVELY ADHERED "SAND PEBBLE FIN."
6. LED STRIP LIGHTING BY SIGN MFGR. TYP.
7. GOOSENECK LIGHT FIXTURE 'RED'
8. CONCRETE FOUNDATION REFER TO STRUCTL. PLANS FOR SIZE AND DETAILS
9. BLDG. MTD. CONE LIGHT FIXTURE PTD.
10. EIFS CONTROL JOINT REF. DETAIL 4/A3
11. RECESSED SS EASIWASH CAB.
12. 42"x 30" DIAMOND TREAD PLATE
13. SIGNAGE BY OWNER – INSTALLATION BY SIGNAGE MANUF., ELEC. CONNECTIONS BY G.C.
14. EIFS OVER STYROFOAM "CONE" BY GC APPROVED BY OWNER PRIOR TO INSTALLATION SEE DETAIL 1,2/A3.0
15. WALL PACK LIGHT FIXTURE. ABOVE REAR DOOR – REF. ELECT. PLANS
16. GAS METER PTD. VERIFY LOC.
17. REFER TO DETAIL 5/A3 FOR GUARD RAIL DETAILS. (IF REQUIRED. NOT SHOWN ON PROTOTYPE)
18. 4" CONC. FILLED PIPE BOLLARD. FREDDY'S RED
19. ILLUMINATED CHANNEL LETTERS BY SIGN MANUF.
20. READY ACCESS MODEL AA300 CURTAIN – 275 PASS-THRU AIR CURTAIN SYSTEM W/ STATUARY BRONZE FIN. ELECTRICAL CONTRACTOR TO VERIFY ELECTRICAL REQ'MTS. SEE MANUFACTURER FOR APPROPRIATE AIR CURTAIN CONFIGURATION BASED ON GEOGRAPHY.
21. READY ACCESS MODEL 275 WINDOW/ MANUAL. SINGLE PANEL SLIDER, 48"W x 60" H. R.O. (INCL. AIR CURTAIN ABOVE). MANUAL OPEN/ ELECTRONIC RELEASE – OPENS ON SIDE THE CAR APPROACHES. BRONZE FINISH –PROVIDED BY & INSTALLED BY G.C.
22. RECESSED KNOX BOX
23. BRICK EXPANSION JOINT REF. DETAIL 3/A3
24. STEEL MESH HINGED GATE (W/LOCK) TO ENCLOSE BOTTOM OF ACCESS LADDER. (PAINT TO MATCH EIFS).
25. ELECTRICAL CT CABINET & DISCONNECT – PTD., VERIFY LOCATION
26. FREDDY'S PEDESTRIAN CROSSING SIGN. BOTTOM OF SIGN @ 56" A.F.F.
27. NOT USED

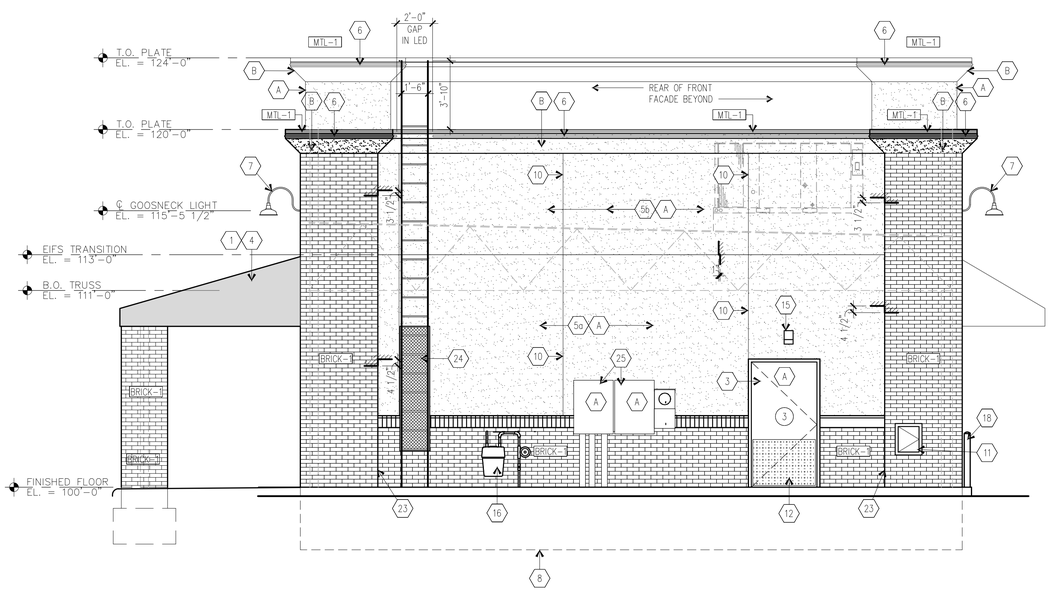

(B) NORTH ELEVATION

1/4"= 1'-0"

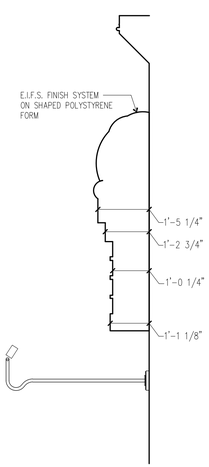

(2) SECTION

1/2"= 1'-0"

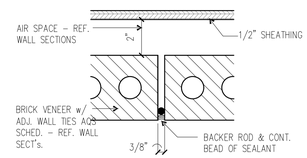

(3) BRICK CONTROL JOINT

3"= 1'-0"

MARKED CJ ON EXTERIOR ELEVATIONS SHEETS A3 & A4

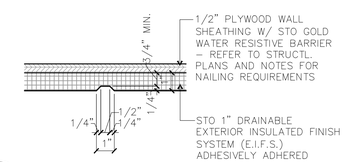

(4) EIFS CONTROL JOINT

3"= 1'-0"

MARKED CJ ON EXTERIOR ELEVATIONS SHEETS A3 & A4

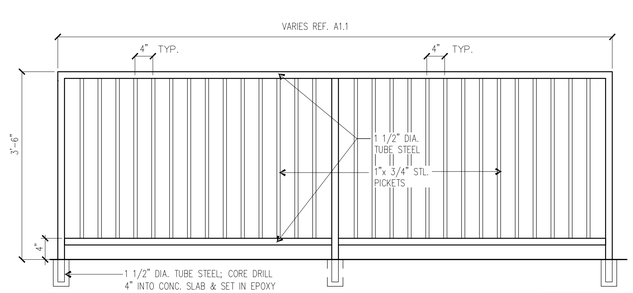

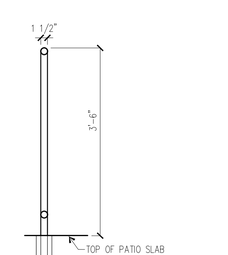

PAINT:
ALL METAL RAILINGS TO BE PAINTED BLACK (P4 – DIRECT TO METAL PAINT) PER FINISH SCHED. ARCH. SHEET A1.2

(5) PATIO GUARD RAIL SECTION

3/4" = 1'-0"

THE DESIGN AND DETAILS DISCLOSED HEREIN ARE THE EXCLUSIVE PROPERTY OF WINTER ARCHITECTS INC. AND SHALL NOT BE COPIED OR REPRODUCED IN WHOLE OR IN PART WITHOUT ITS PRIOR WRITTEN CONSENT.

DAN WINTER, ARCHITECT

FREDDY'S FROZEN CUSTARD
EDGAR ROAD
LINDEN, NEW JERSEY

STATE OF NEW JERSEY DAN WINTER 14681 REGISTERED ARCHITECT 7/13/20

WINTER ARCHITECTS
1024 EAST FIRST STREET
WICHITA, KS. 67214
PH. 316-267-7142

EXTERIOR ELEVATIONS

DATE
7/13/2020

DRAWN BY: RC
CHECKED BY: DW

SHEET NO.
A3

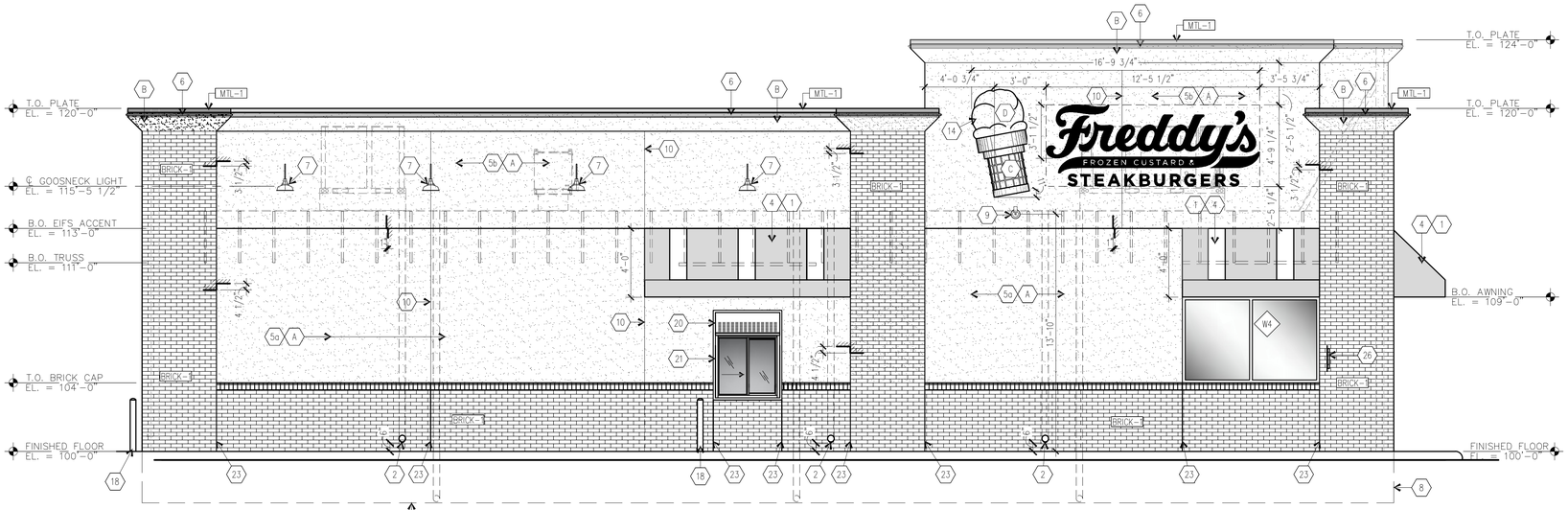

(A) WEST ELEVATION

1/4"= 1'-0"

SIGNAGE AREA: WEST ELEVATION

FREDDY'S = 59.4 SQ.FT.
CONE = 15 SQ.FT.(ARCHITECTURAL FEATURE)

TOTAL = 74.4 SQ.FT.

SIGNAGE AREA: EAST ELEVATION

FREDDY'S = 59.4 SQ.FT.
CONE = 15 SQ.FT.(ARCHITECTURAL FEATURE)

TOTAL = 74.4 SQ.FT.

AWNING COLOR KEY

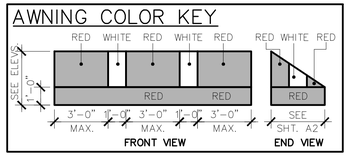

NOTE TO AWNING MANUFACTURER AND AWNING INSTALLER. AWNING FRAME TO BE ENGINEERED FOR APPROVAL BY LOCAL CODE AND DESIGNED TO MISS ALL BUILDING PROTRUSIONS NOT SHOWN ON PLANS.

CAULKING COLOR NOTE:
- AT EIFS / BRICK – MATCH EIFS
- AT BRICK / BRICK – MATCH BRICK
- AT EIFS / EIFS – MATCH EIFS
- AT EIFS / STOREFRONT – MATCH DARK BRONZE FRAME

EXTERIOR FINISH SCHEDULE

SHERWIN WILLIAMS – PARENT NUMBER: BE37 FREDDY'S FROZEN CUSTARD

EXTERIOR PAINT	DESCRIPTION	FINISH NO.	MFGR.	MFGR. NO.	COLOR	REMARKS
BUILDING WALLS	PAINT *	(A)	SHERWIN WILLIAMS	#7533	KHAKI SHADE	PAINT WITH TWO COATS ACRYLIC LATEX (SATIN)
BUILDING TRIM	PAINT *	(B)	SHERWIN WILLIAMS	#6126	FREDDY'S PEARL	PAINT WITH TWO COATS ACRYLIC LATEX (SATIN)
CONE	PAINT *	(C)	SHERWIN WILLIAMS	#17-143	BISCUIT FREDDY'S CONE	PAINT WITH TWO COATS ACRYLIC LATEX (SATIN)
CUSTARD	PAINT *	(D)	SHERWIN WILLIAMS	#17-313	FREDDY'S ICE WHITE	PAINT WITH TWO COATS ACRYLIC LATEX (SATIN)
BOLLARD	PAINT	P3	SHERWIN WILLIAMS	#17-572	FREDDY'S RED	PAINT WITH TWO COATS HIGH PERFORMANCE ACRYLIC (GLOSS)
GUARD RAIL	PAINT	P4	SHERWIN WILLIAMS	#B66B300	FREDDY'S JET BLACK	PAINT WITH TWO COATS HIGH PERFORMANCE ACRYLIC (GLOSS)

* NOTE: ALL EXTERIOR INSULATED FINISH SYSTEM (E.I.F.S.) IS PRE-MIXED WITH SHERWIN-WILLIAMS COLORS AS SPEC'D. ABOVE, NO PAINTING OF BUILDING E.I.F.S. (INCL. CONE) IS REQUIRED.

EXTERIOR BRICK	DESCRIPTION	FINISH NO.	MFGR.		COLOR & TEXTURE	REMARKS
BUILDING BRICK (OPT. #1)	BRICK MODULAR (OPT. #1)	BRICK-1	THE LAKEWOOD BRICK COMPANY	ACME BRICK CO. P:316-941-3594	WELLSHIRE	GROUT COLOR – GRAY MODULAR & TIN – MADE RUMBLED
BUILDING BRICK (OPT. #2)	BRICK MODULAR (OPT. #2)	BRICK-1	INTERSTATE BRICK-UTAH		MOUNTAIN RED	GROUT COLOR – GRAY MODULAR & TIN – RUMBLED EXTRA CHARGE

METAL COPING	DESCRIPTION	FINISH NO.			COLOR	REMARKS
BUILDING COPING	COPING	MTL-1	DUROLAST		BRITE RED	2 PC COMPRESSION COPING CAP. SLOPE TOWARDS ROOF.

GENERAL NOTES:

SIGNS SHOWN ON THESE ELEVATIONS ARE FOR CODE REVIEW PURPOSES ONLY. THESE SIGN ELEVATIONS ARE NOT TO BE USED AS OR CONSTRUED AS SHOP DRAWINGS FOR SIGN CONSTRUCTION. SIGN SHOP DRAWINGS ARE PRODUCED BY THE SIGN MANUFACTURER FOR REVIEW AND APPROVAL BY THE OWNER.

NOTE TO AWNING MANUFACTURER AND AWNING INSTALLER. AWNING FRAME TO BE ENGINEERED FOR APPROVAL BY LOCAL CODE AND DESIGNED TO MISS ALL BUILDING PROTRUSIONS NOT SHOWN ON PLANS.

ELEVATION KEY NOTES:

1. (2)-TUBE, STRIP LED FIXTURES WITH CLEAR LENS COVERS TO BACK LIGHT AWNINGS, TYP. SUPPLIED BY OWNER. WIRED & INSTALLED BY ELEC. CONTR.
2. OVERFLOW DRAIN WITH LAMBS TONGUE
3. HOLLOW METAL EXIT DR. REF. DOOR SCHED.
4. EXTERIOR VINYL AWNING & ALUM FRAME BY OWNER AND AWNING MANUF, TYP REF. AWNING COLOR KEY SHT'S A3 & A4
5a. STO 1 1/2" DRAINABLE EXTERIOR INSULATED FINISH SYSTEM (E.I.F.S.) ADHESIVELY ADHERED "SAND PEBBLE FIN."
5b. STO 2 1/2" DRAINABLE EXTERIOR INSULATED FINISH SYSTEM (E.I.F.S.) ADHESIVELY ADHERED "SAND PEBBLE FIN."
6. LED STRIP LIGHTING BY SIGN MFGR. TYP.
7. GOOSENECK LIGHT FIXTURE 'RED'
8. CONCRETE FOUNDATION REFER TO STRUCTL. PLANS FOR SIZE AND DETAILS
9. BLDG. MTD. CONE LIGHT FIXTURE PTD.
10. EIFS CONTROL JOINT REF. DETAIL 4/A3
11. RECESSED SS EASIWASH CAB.
12. 42"x 30" DIAMOND TREAD PLATE
13. SIGNAGE BY OWNER – INSTALLATION BY SIGNAGE MANUF., ELEC. CONNECTIONS BY G.C.
14. EIFS OVER STYROFOAM "CONE" BY GC APPROVED BY OWNER PRIOR TO INSTALLATION SEE DETAIL 1,2/A3.0
15. WALL PACK LIGHT FIXTURE. ABOVE REAR DOOR – REF. ELECT. PLANS
16. GAS METER PTD. VERIFY LOC.
17. REFER TO DETAIL 5/A3 FOR GUARD RAIL DETAILS. (IF REQUIRED. NOT SHOWN ON PROTOTYPE)
18. 4" CONC. FILLED PIPE BOLLARD. FREDDY'S RED
19. ILLUMINATED CHANNEL LETTERS BY SIGN MANUF.
20. READY ACCESS MODEL AA300 CURTAIN – 275 PASS-THRU AIR CURTAIN SYSTEM W/ STATUARY BRONZE FIN. ELECTRICAL CONTRACTOR TO VERIFY ELECTRICAL REQ'MTS. SEE MANUFACTURER FOR APPROPRIATE AIR CURTAIN CONFIGURATION BASED ON GEOGRAPHY.
21. READY ACCESS MODEL 275 WINDOW/ MANUAL. SINGLE PANEL SLIDER, 48"W x 60" H. R.O. (INCL. AIR CURTAIN ABOVE). MANUAL OPEN/ ELECTRONIC RELEASE – OPENS ON SIDE THE CAR APPROACHES. BRONZE FINISH –PROVIDED BY & INSTALLED BY G.C.
22. RECESSED KNOX BOX
23. BRICK EXPANSION JOINT REF. DETAIL 3/A3
24. STEEL MESH HINGED GATE (W/LOCK) TO ENCLOSE BOTTOM OF ACCESS LADDER. (PAINT TO MATCH EIFS).
25. ELECTRICAL CT CABINET & DISCONNECT – PTD., VERIFY LOCATION
26. FREDDY'S PEDESTRIAN CROSSING SIGN. BOTTOM OF SIGN @ 56" A.F.F.
27. NOT USED

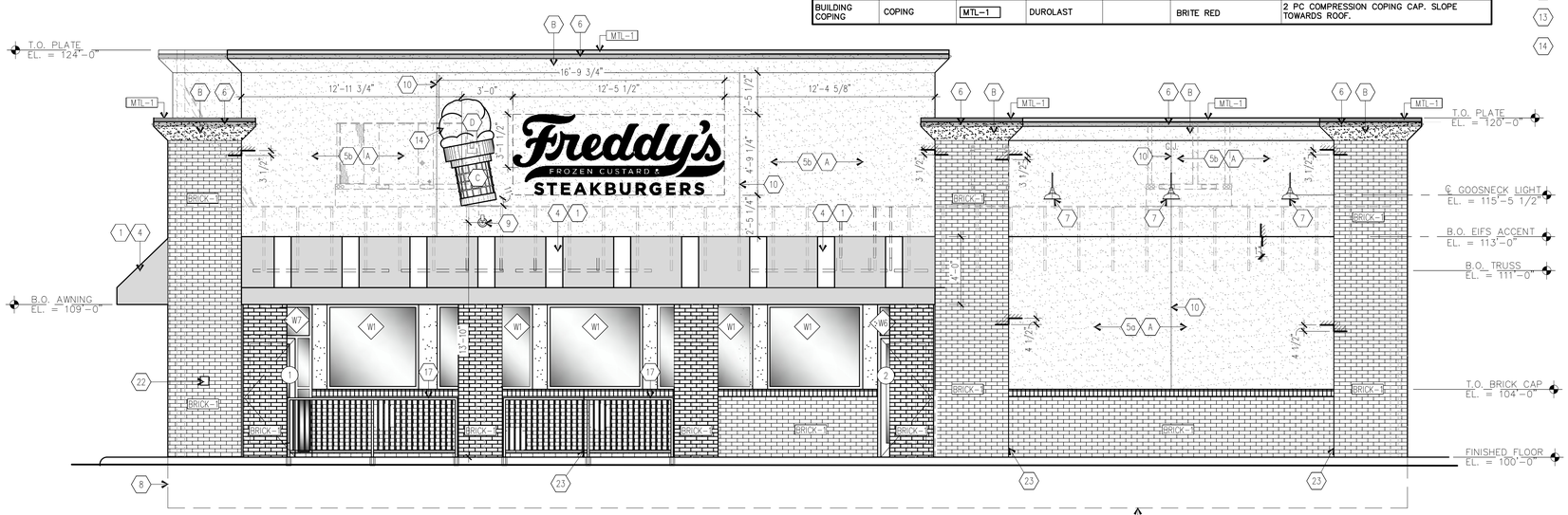

(B) EAST ELEVATION

1/4"= 1'-0"

THE DESIGN AND DETAILS DISCLOSED HEREIN ARE THE EXCLUSIVE PROPERTY OF WINTER ARCHITECTS INC. AND SHALL NOT BE COPIED OR REPRODUCED IN WHOLE OR IN PART WITHOUT ITS PRIOR WRITTEN CONSENT.

DAN WINTER, ARCHITECT

FREDDY'S FROZEN CUSTARD

EDGAR ROAD
LINDEN, NEW JERSEY

STATE OF NEW JERSEY
DAN WINTER
14461
REGISTERED ARCHITECT
7-13-20

WINTER ARCHITECTS
1024 EAST FIRST STREET
WICHITA, KS. 67214
PH. 316-267-7142

EXTERIOR ELEVATIONS

DATE
7/13/2020

DRAWN BY: RC
CHECKED BY: DW

SHEET NO.
A4